G2285MB 20041111

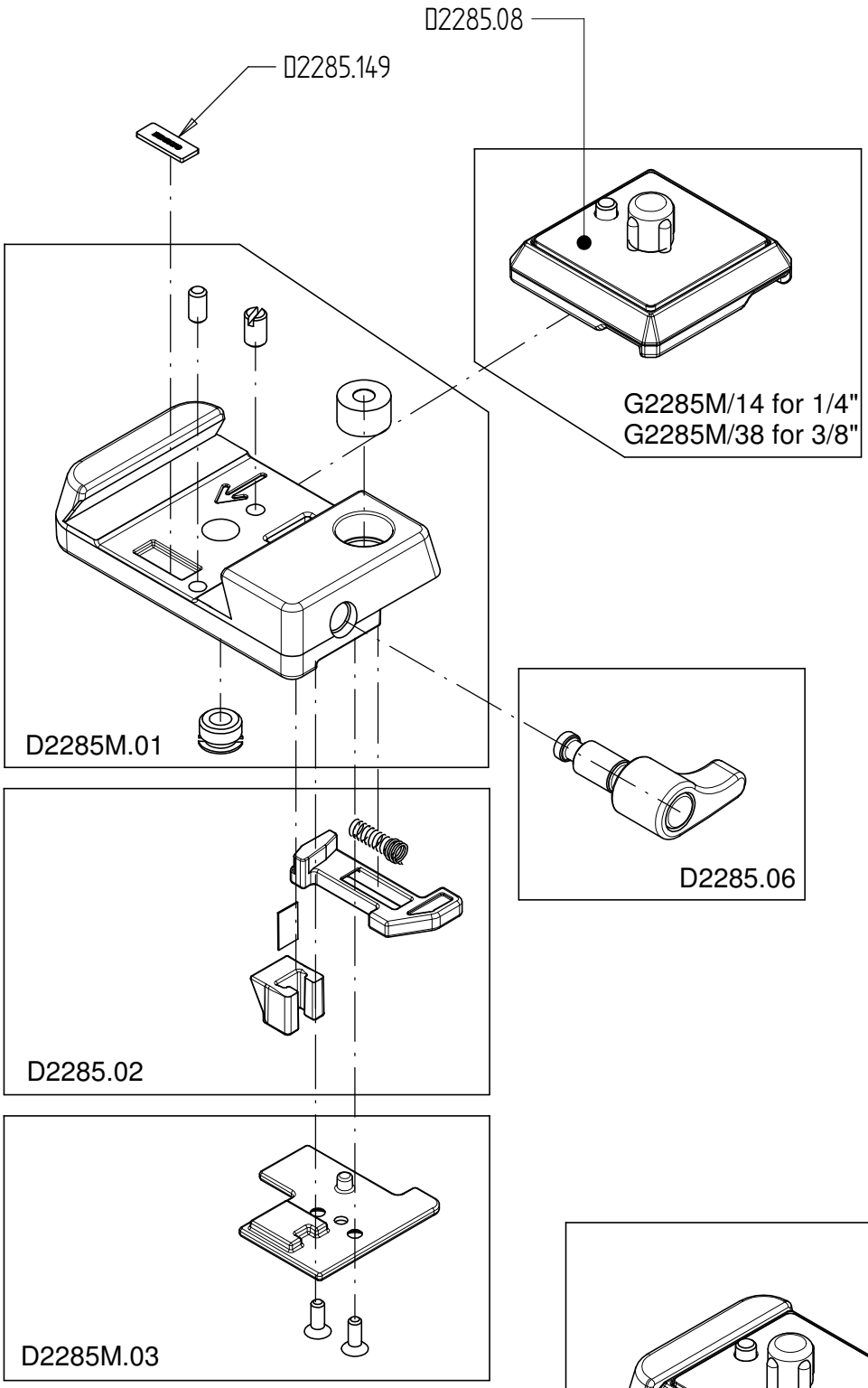

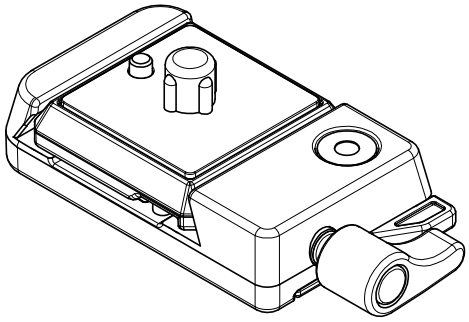

G2285MB

for serial numbers from G0003988