G1341 _ 20040629

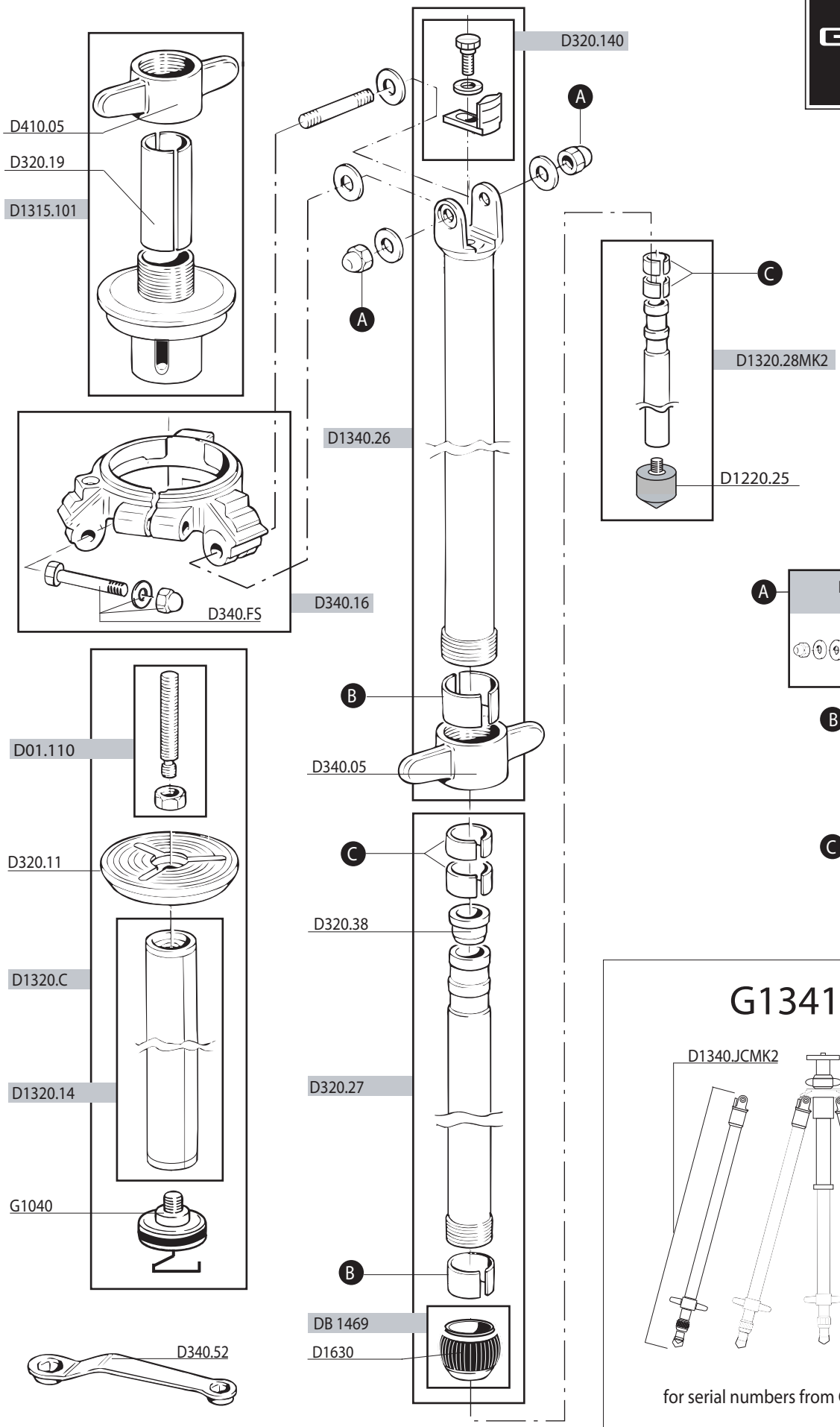

G1341

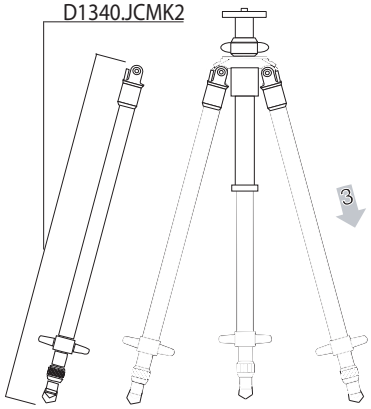

for serial numbers from G0000000