G1177M 20040803

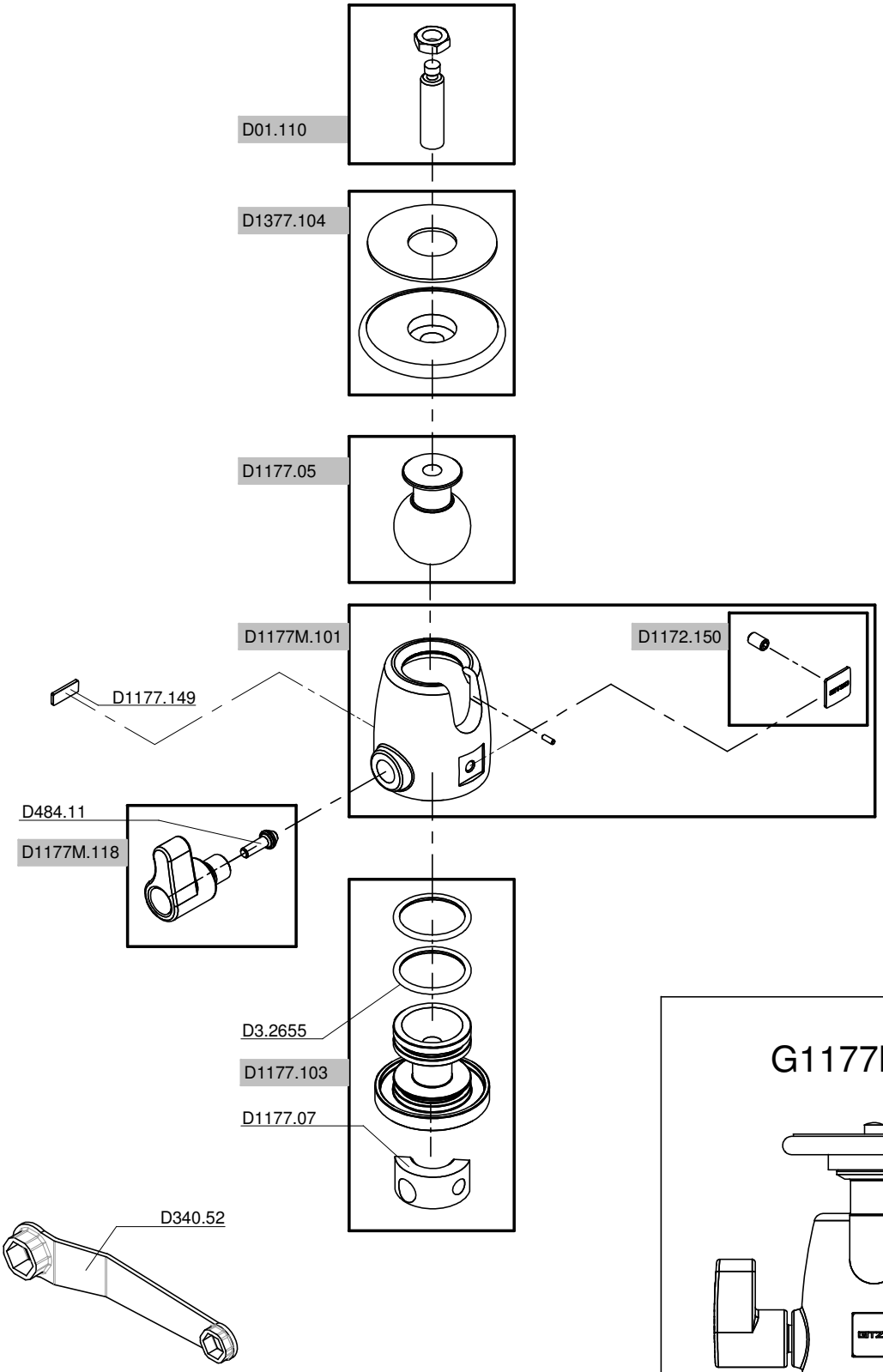

G1177M

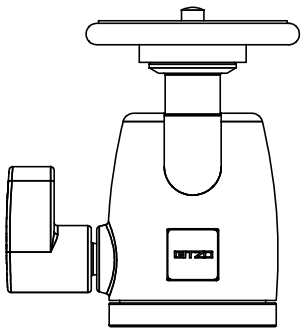

for serial numbers from H0060142