G1171M 20040628

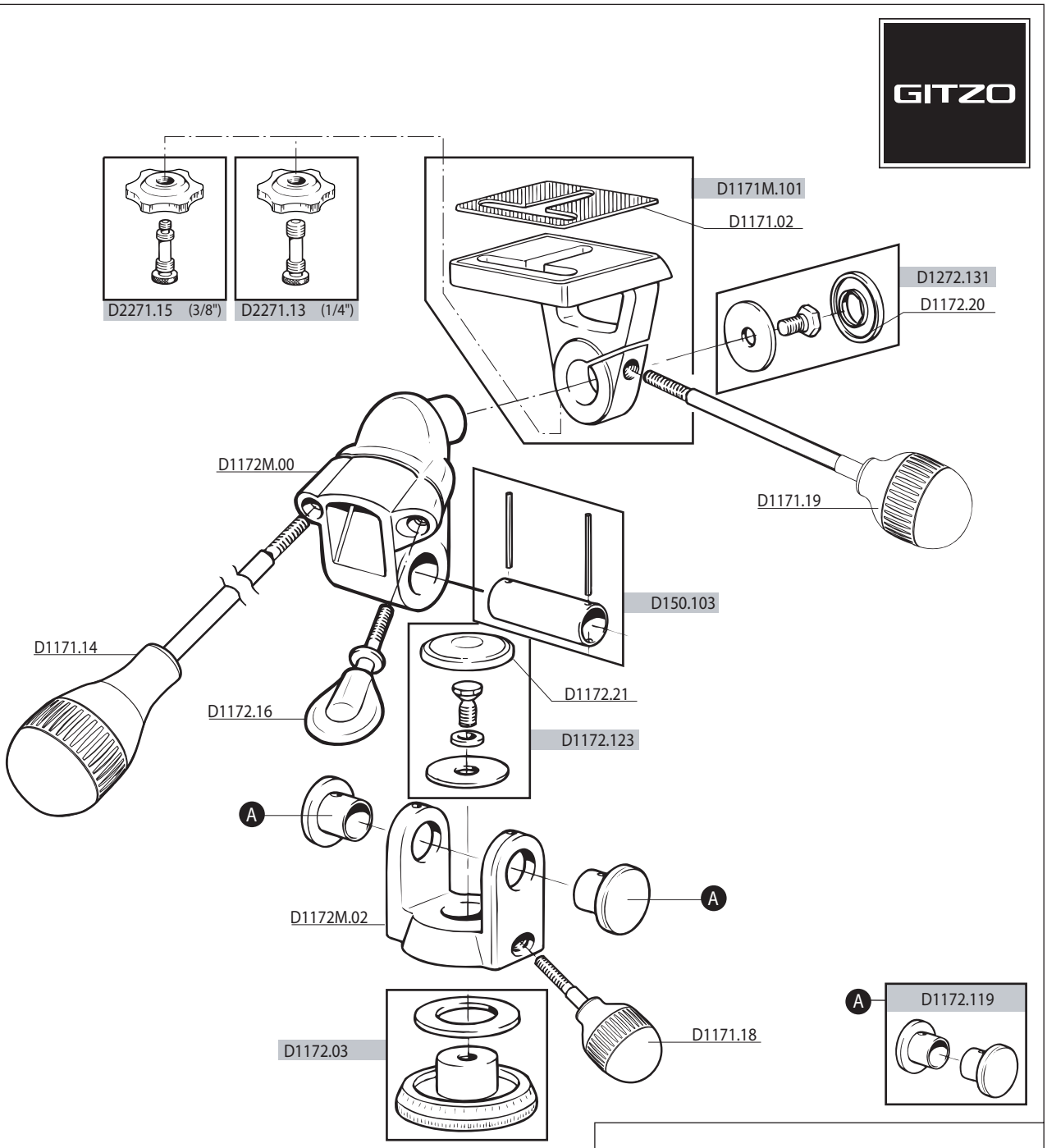
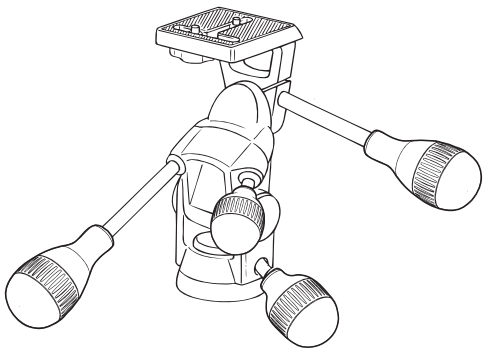
G1171M