2005-05-10

Manfrotto
PROFESSIONAL CAMERA SUPPORTS
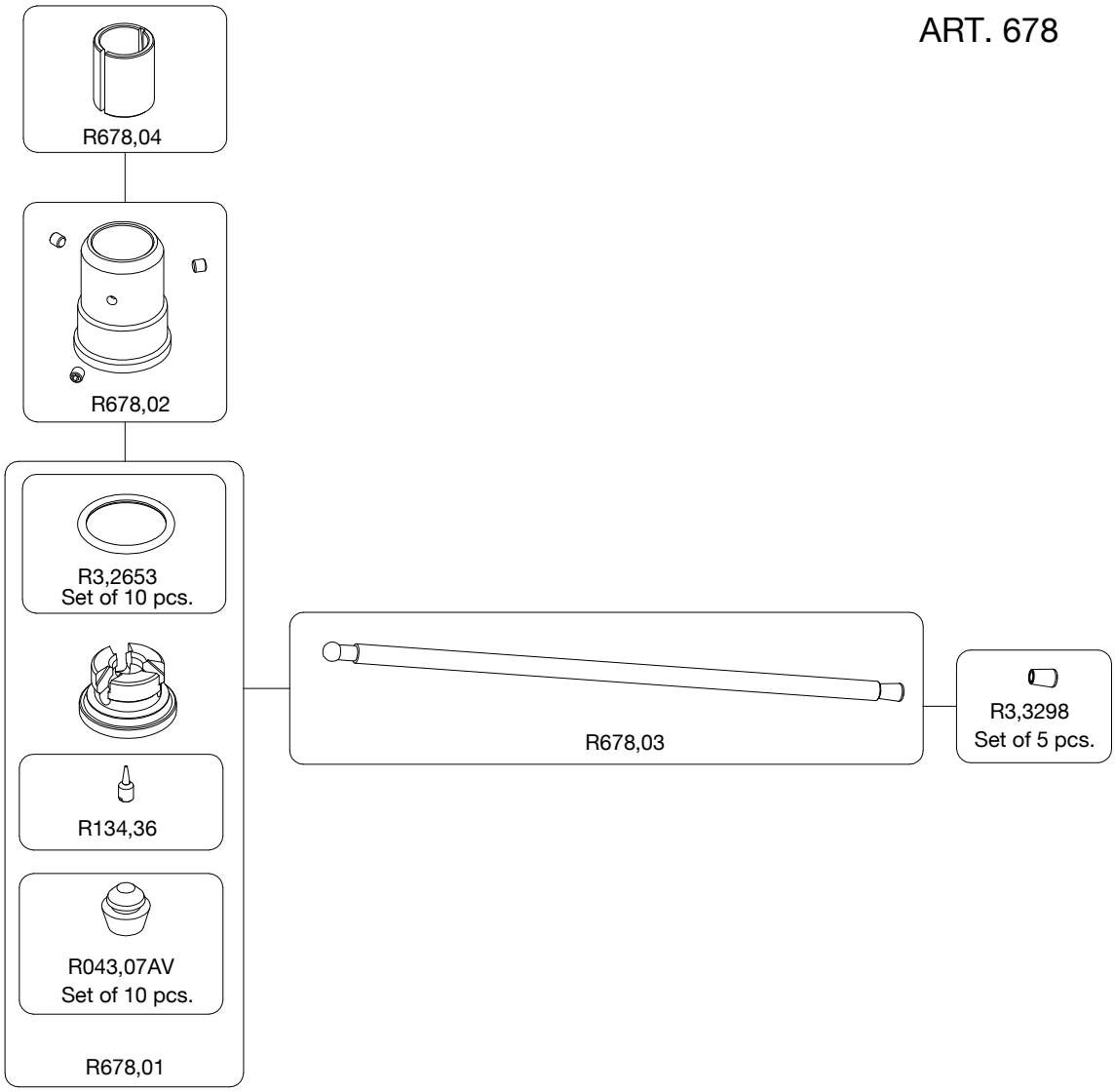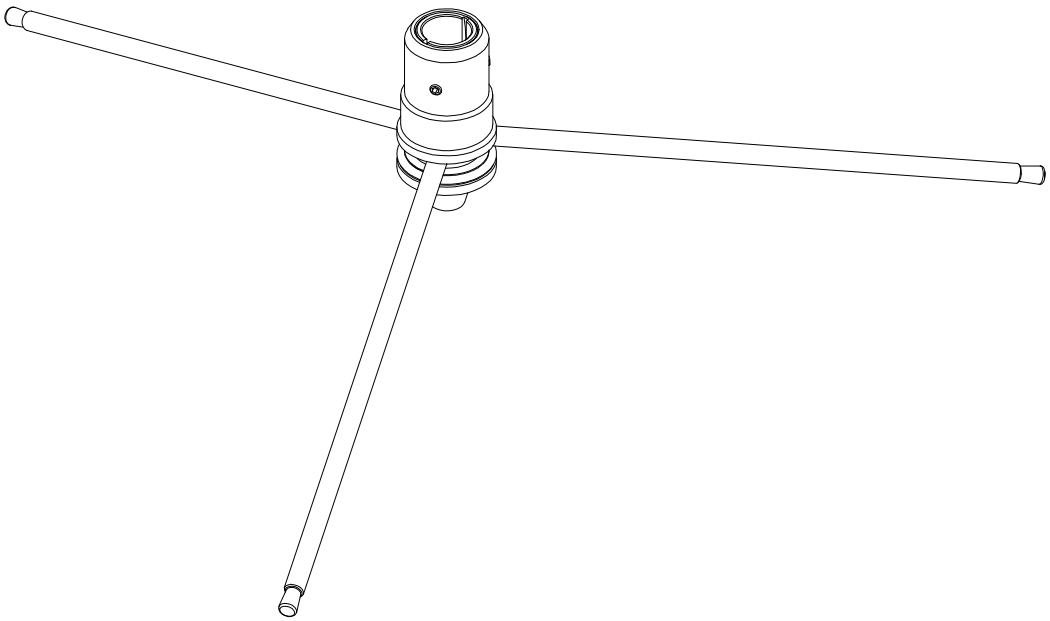
ART. 678