G1560 20040831

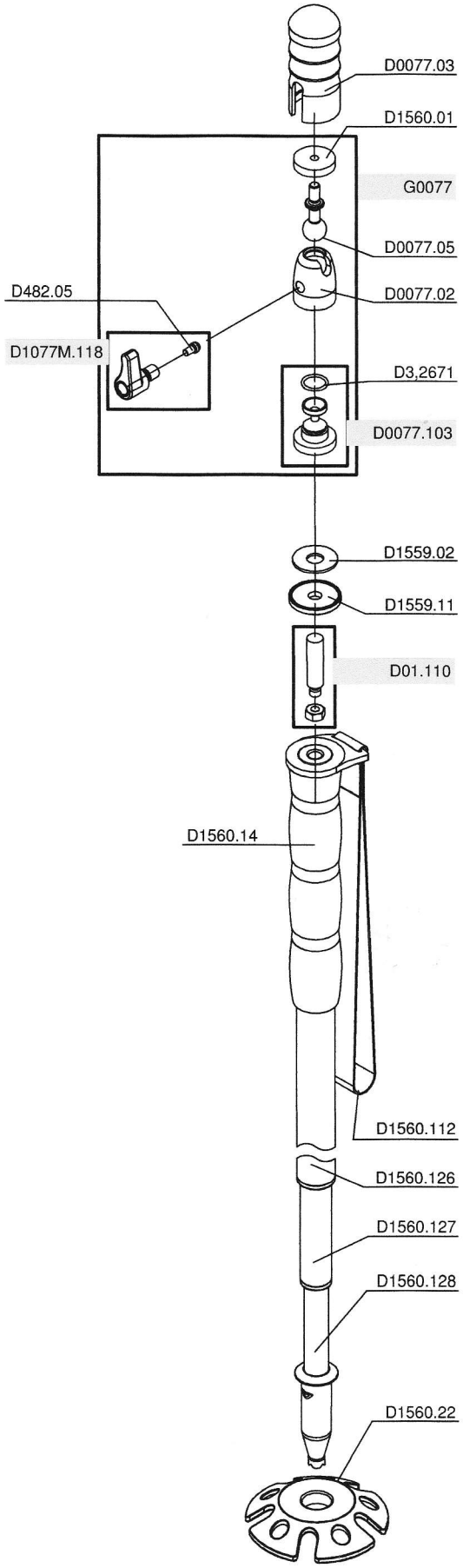

G1560

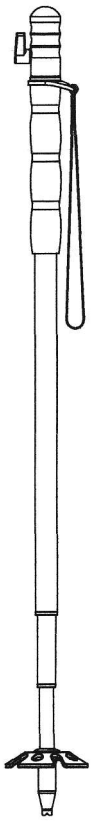

for serial numbers from G0000000